Liquid ring compressors

KPH 90554, KPH 90567
KPH 10054, KPH 11055

Compression pressures: **0,2 to 1,5 bar**
Suction volume flow: **2300 to 10500 m³/h**

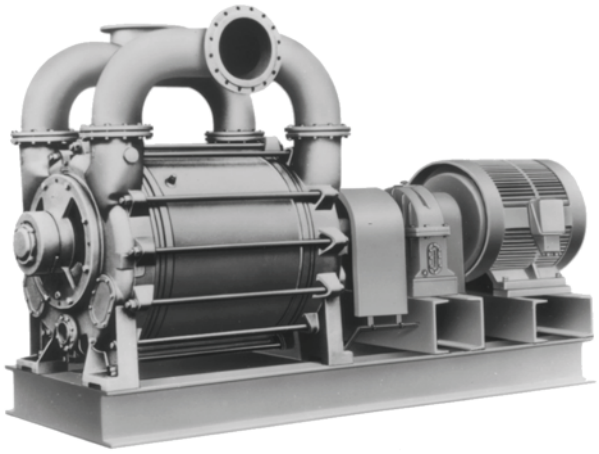

CONSTRUCTION TYPE

Sterling SIHI liquid ring compressors are displacement compressors of simple and robust construction having following special characteristics:

- Pumping of nearly all gases and vapours
- non polluting due to a nearly isothermal compression
- oil-free, as no lubrication in the working chamber
- additional liquid gas can be handled with the gas flow
- easy maintenance and reliable operation
- low noise and nearly free from vibration
- wide choice of material, therefore applicable nearly anywhere
- incorporated central drain
- no metallic contact of the rotating parts

The Sterling SIHI liquid ring compressors KPH 90554, KPH 90567, KPH 10054 and KPH 11055 are single-stage compressors. They can be applied without modifications as vacuum pumps up to a suction pressure of 120 mbar (see catalogue part LI 7, LI 8 and LI 9).

APPLICATION

Handling and compressing of dry and humid gases; entrained liquid can be handled during normal duty. The compressors are applied in all fields where a compression over pressure up to 1,5 bar has to be created by robust compressors and only a small increase in temperature is admissible during compression.
Fields of application are e.g.

- the plastics industry, for the recovery of process gases as vinyl chloride
- the petrochemical industry, for the compression of combustible gases as gasoline vapours or hydrogen
- transport of gases in general e.g. to a reactor

NOTE

During the operation the compressor must continuously be supplied with service liquid, normally water, in order to eliminate the heat resulting from the gas compression and to replenish the liquid ring, because part of the liquid is leaving the pump together with the gas. This liquid can be separated from the gas in a pressure liquid separator (see catalogue part accessories).
It is possible to reuse the service liquid. The compressors are equipped with a device by which the contaminated service liquid can be drained during operation, if necessary.
The direction of rotation is clockwise when locking from the drive on the pump.

GENERAL TECHNICHAL DATA

Pump type	unit	KPH 90554	KPH 90567	KPH 10054	KPH 11055
Speed	1/min	605 690 740	605 690 740	475 535 590	410 450 485
Max. compression over pressure	bar	1,5		1,5	1,5
Hydraulic test (over pressure)	bar	3		3	3
Moment of inertial of the rotating pump parts and of the water filling	kg · m²	23,5	28	57,5	175
Sound pressure level of measuring area	dB (A)	92 94 94	92 94 94	91 92 94	91 91 92
Min. pulley diameter permissible in case of V-belt drive	mm	on request	on request	on request	on request
Max. gas temperature	°C	80		80	80
Service liquid					
max. admissible temperature	°C	60		60	60
max. viscosity	mm²/s	90		90	90
max. density	kg/m³	1200		1200	1200
volume up to shaft level	liter	160	185	230	410

The combination of several limiting values is not admissible.

Material design

Item	COMPONENTS	MATERIAL DESIGN	
		02	42
0001, 0002	Casing	0.6025	1.4408
0010, 0011	Guide disk	0.6025	1.4408
0030	Vane wheel impeller	1.0570	1.4571
0035	Central body	1.0038	1.4571
0200	Shaft	1.0503	
0270	Shaft sleeve	1.4027.05	1.4581
0400	Gland packing	GORE	

Sectional drawing KPH 90554, KPH 90567, KPH 10054, KPH 11055

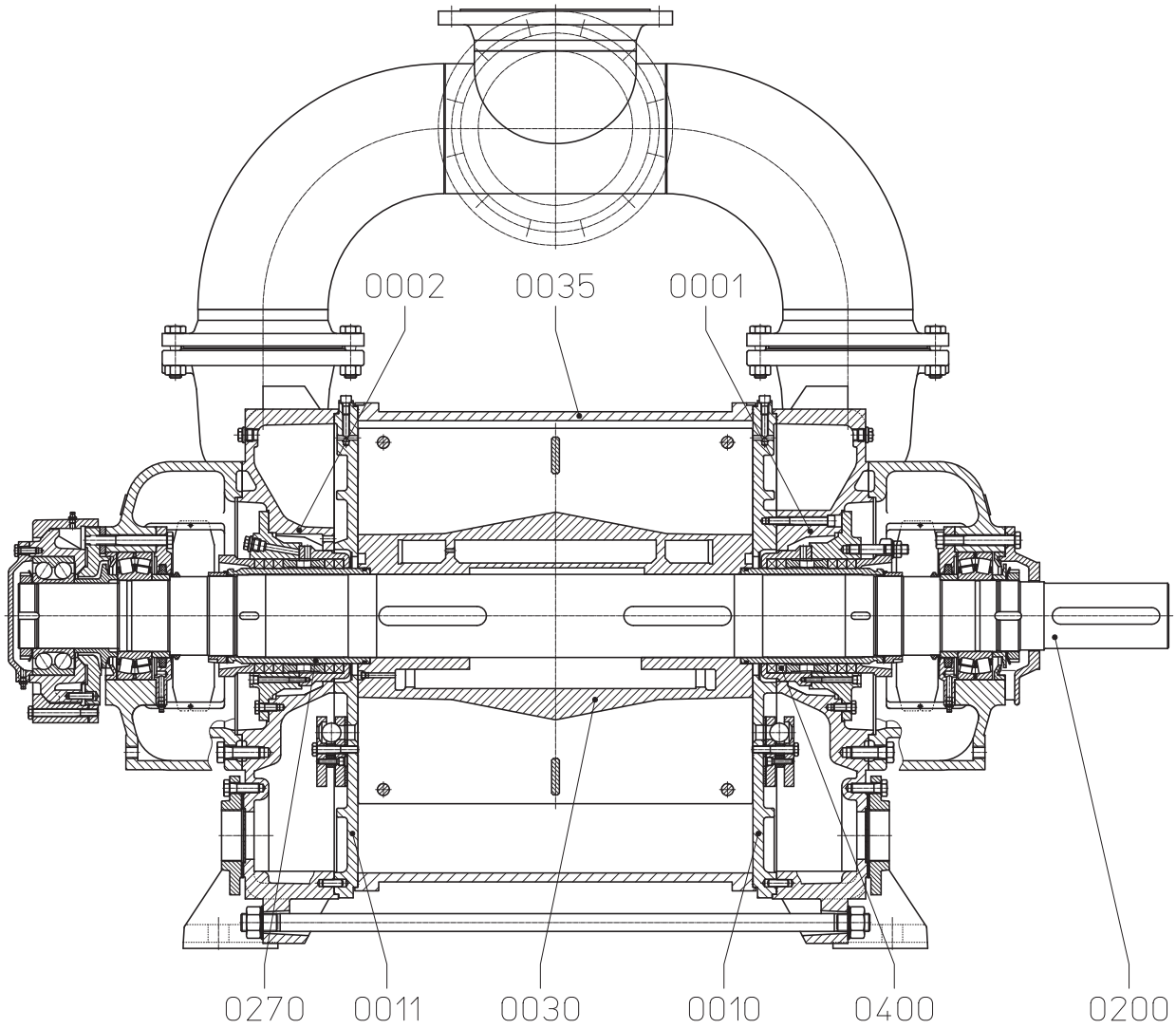

Suction volume flow and power absorption KPH 90554

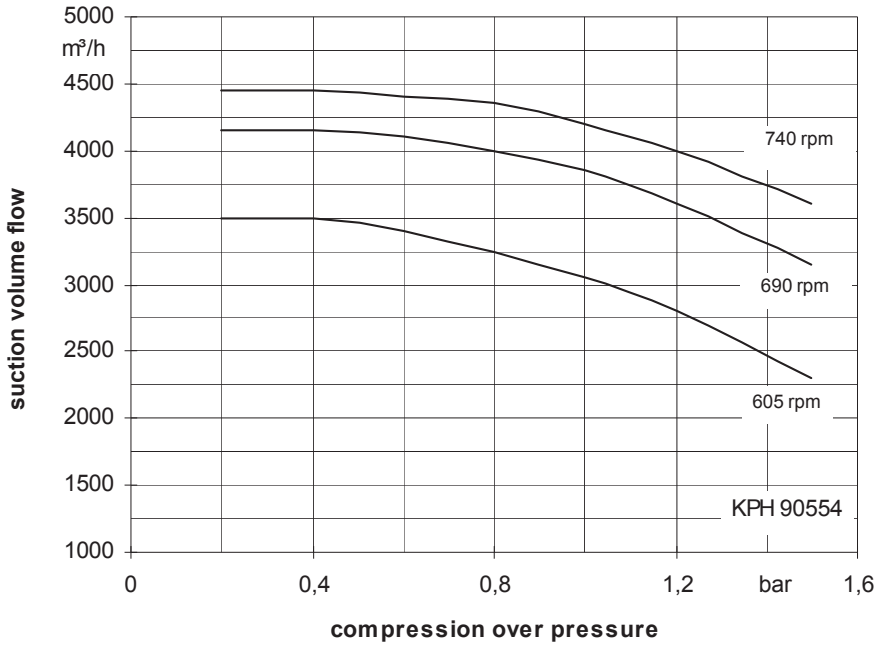

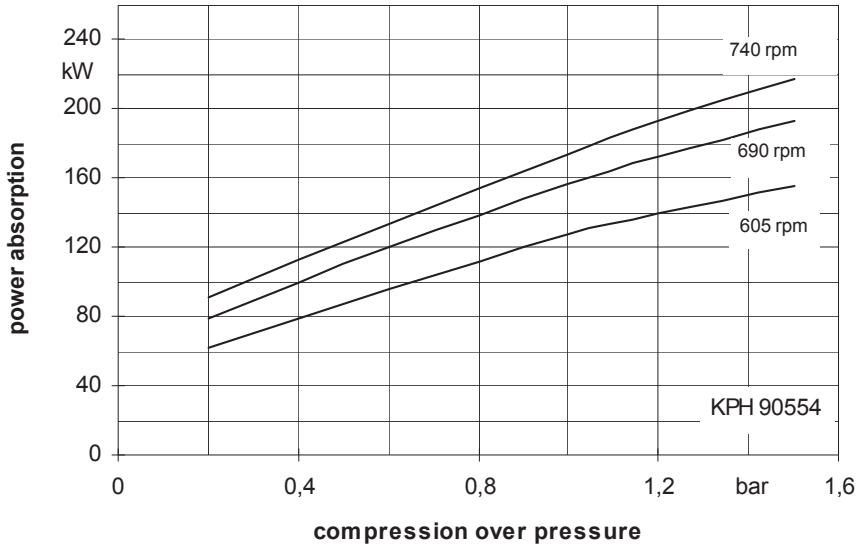

The values indicated for volume and power absorption are valid for compression of dry air at 20°C from atmospheric pressure (1013 mbar) of the respective compression pressure with water at 20°C as service liquid. Tolerance of the curve values is 10%. The compression pressure in bar is indicated as pressure above the atmospheric pressure.

The data indicated change with deviating service conditions, such as deviating physical data of the gas to be handled or of the service liquid (vapour pressure, temperature, density, viscosity) when handling entrained liquid, at a suction pressure deviating from atmospheric pressure handling gas-vapours mixtures.

For determination of service data for deviating service conditions please see catalogue section TH.

Suction volume flow and power absorption KPH 90567

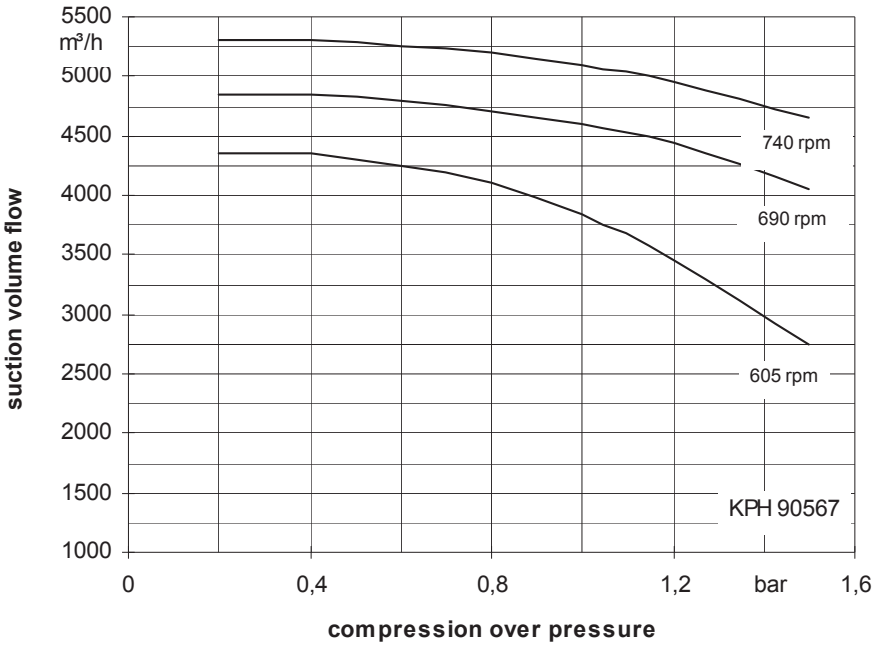

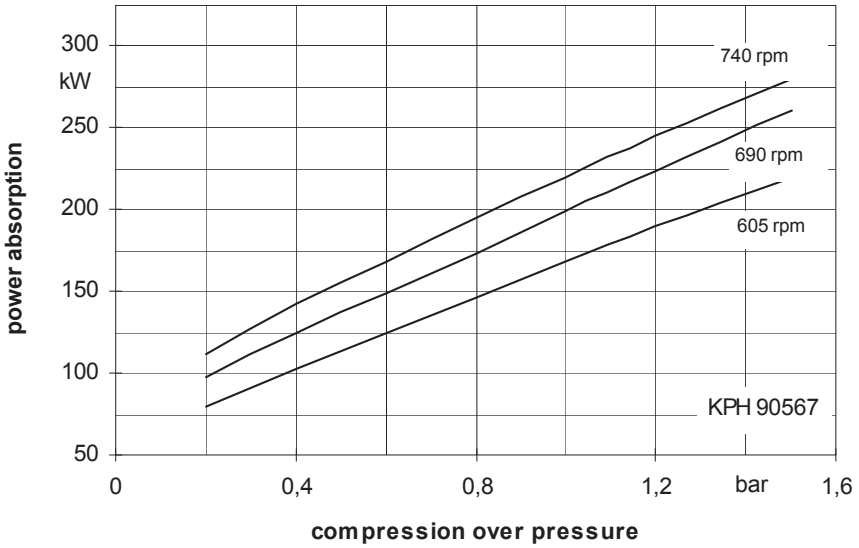

The values indicated for volume and power absorption are valid for compression of dry air at 20°C from atmospheric pressure (1013 mbar) of the respective compression pressure with water at 20°C as service liquid. Tolerance of the curve values is 10%. The compression pressure in bar is indicated as pressure above the atmospheric pressure.

The data indicated change with deviating service conditions, such as deviating physical data of the gas to be handled or of the service liquid (vapour pressure, temperature, density, viscosity) when handling entrained liquid, at a suction pressure deviating from atmospheric pressure handling gas-vapours mixtures.

For determination of service data for deviating service conditions please see catalogue section TH.

Suction volume flow and power absorption KPH 10054

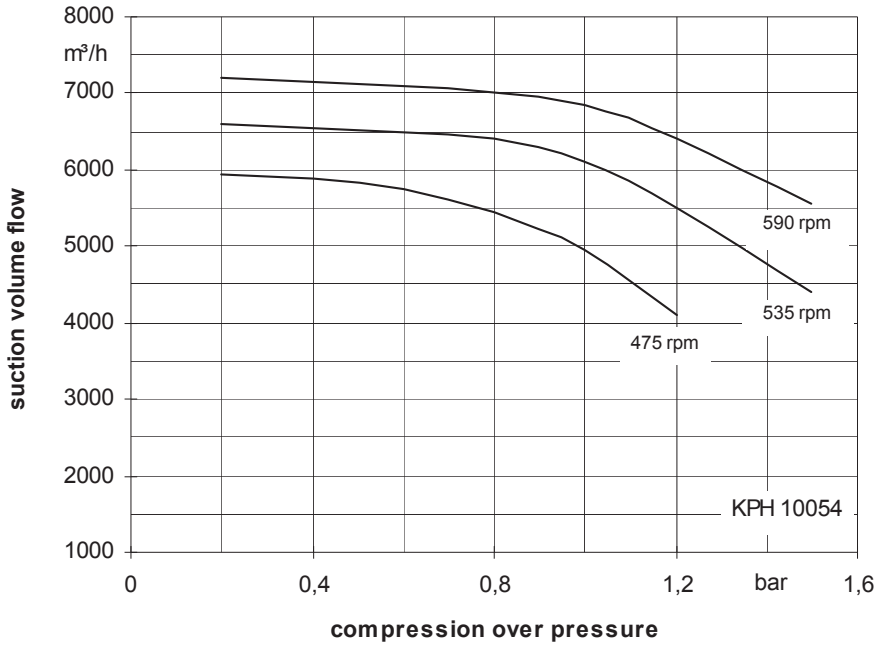

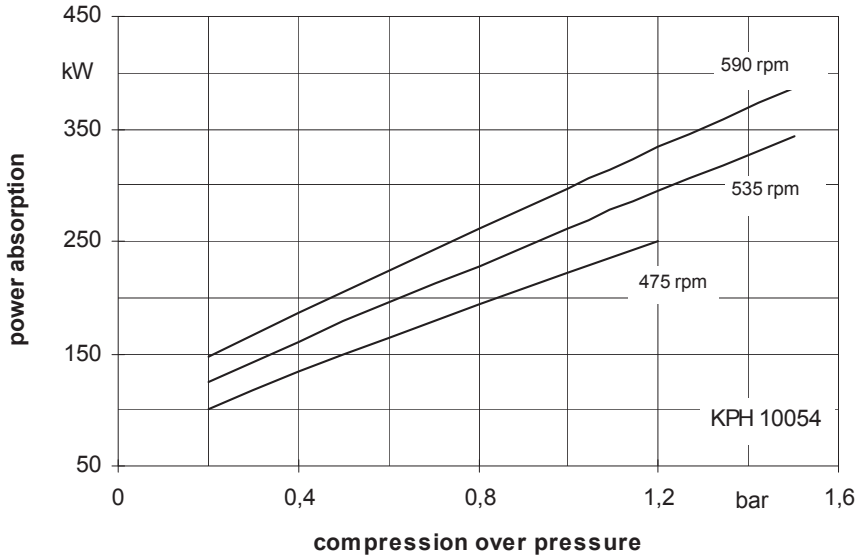

The values indicated for volume and power absorption are valid for compression of dry air at 20°C from atmospheric pressure (1013 mbar) of the respective compression pressure with water at 20°C as service liquid. Tolerance of the curve values is 10%. The compression pressure in bar is indicated as pressure above the atmospheric pressure.

The data indicated change with deviating service conditions, such as deviating physical data of the gas to be handled or of the service liquid (vapour pressure, temperature, density, viscosity) when handling entrained liquid, at a suction pressure deviating from atmospheric pressure handling gas-vapours mixtures.

For determination of service data for deviating service conditions please see catalogue section TH.

Suction volume flow and power absorption KPH 11055

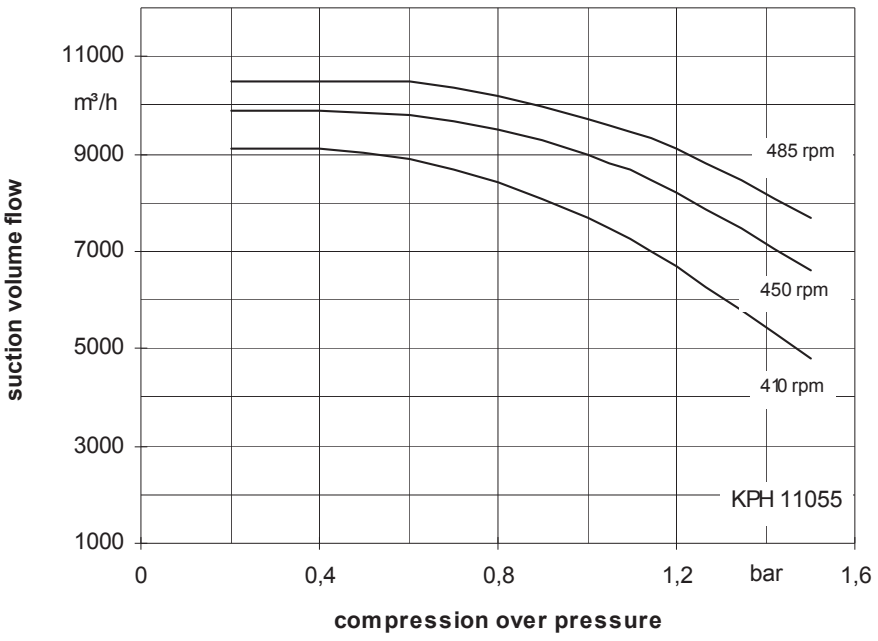

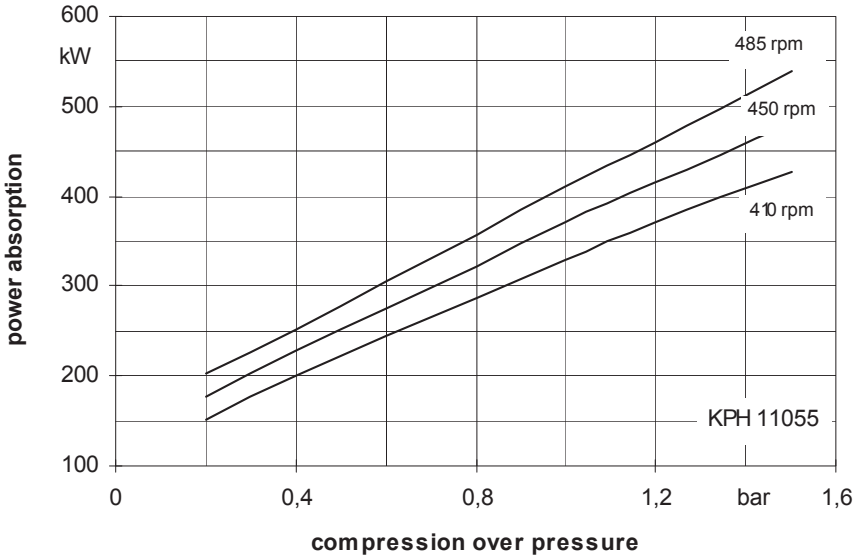

The values indicated for volume and power absorption are valid for compression of dry air at 20°C from atmospheric pressure (1013 mbar) of the respective compression pressure with water at 20°C as service liquid. Tolerance of the curve values is 10%. The compression pressure in bar is indicated as pressure above the atmospheric pressure.

The data indicated change with deviating service conditions, such as deviating physical data of the gas to be handled or of the service liquid (vapour pressure, temperature, density, viscosity) when handling entrained liquid, at a suction pressure deviating from atmospheric pressure handling gas-vapours mixtures.

For determination of service data for deviating service conditions please see catalogue section TH.

Dimension table KPH 90554, KPH 90567

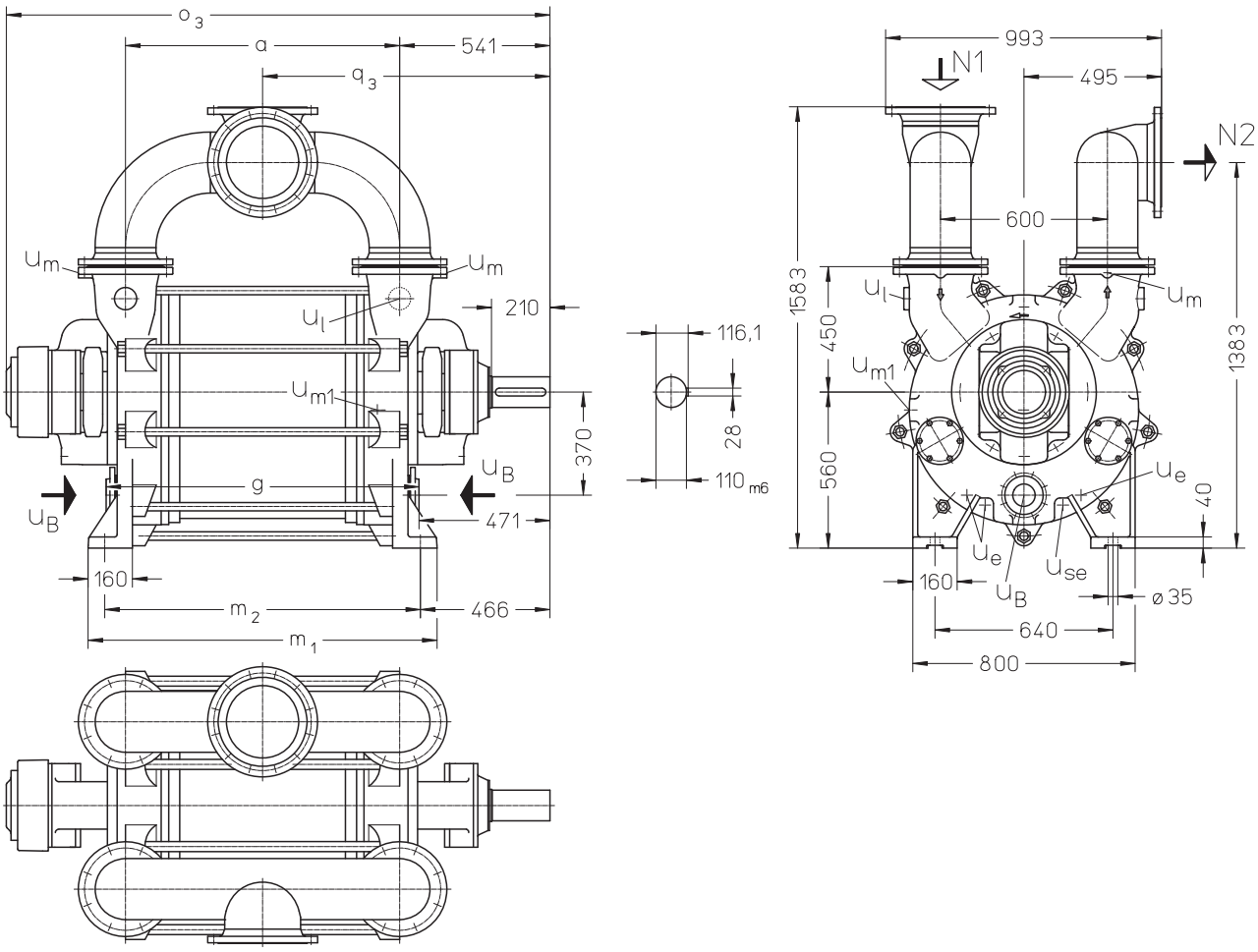

N 1 = gas-inlet DN 250

N 2 = gas-outlet DN 250

u_B = connection for service liquid G 3

u_e = drainage (screwed plug) G ¾

u_l = connection for vent cock G 1 ½

u_m = connection for pressure gauge G ½

u_{m1} = connection for drain valve G ¾

u_{se} = connection for dirt drain ¾

	a	g	m_1	m_2	o_3	q_3	weight abt. kg
KPH 90554	861	1001	1130	1011	1830	971	2160
KPH 90567	986	1126	1255	1136	1955	1034	2430

flange connections to DIN 2501 PN 10	
DN	250
k	350
D	395
number x d_2	12 x 22

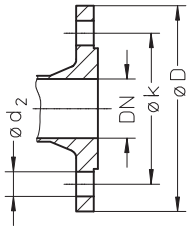

Dimension table KPH 10054

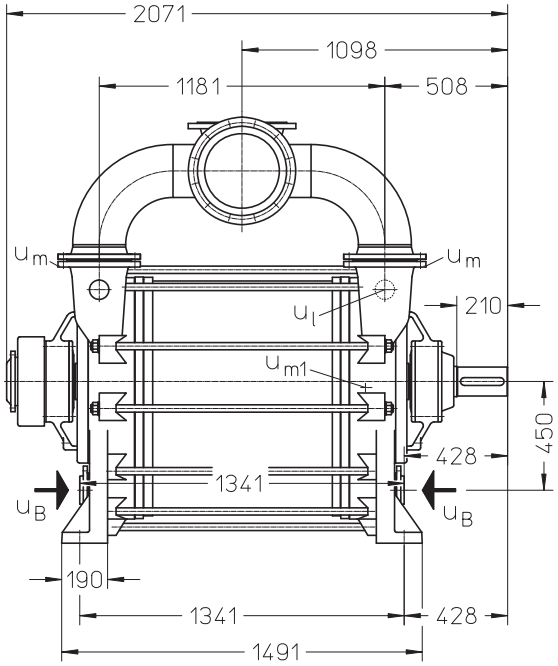

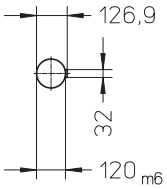

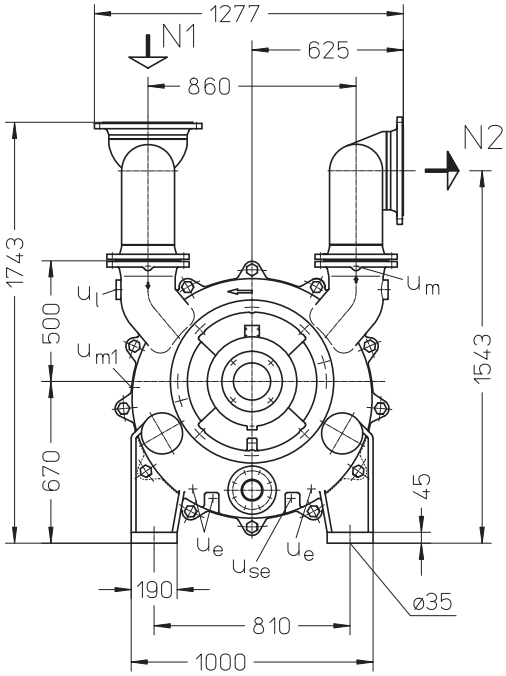

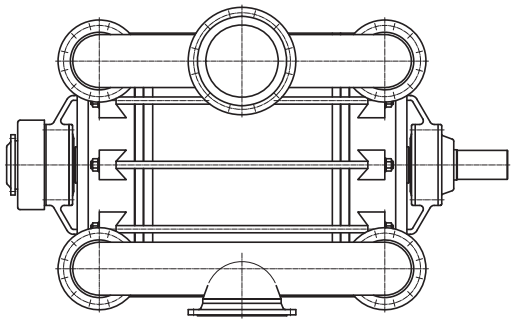

N 1 = gas-inlet DN 300

N 2 = gas-outlet DN 300

u_B = connection for service liquid G 3

u_e = drainage (screwed plug) G ¾

u_l = connection for vent cock G 1 ½

u_m = connection for pressure gauge G ½

u_{m1} = connection for drain valve G 3/8

u_{se} = connection for dirt drain G ¾

weight: abt. 3220 kg

flange connections to DIN 2501 PN 10	
DN	300
k	400
D	445
number x d_2	12 x 22

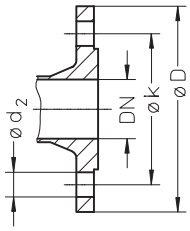

Dimension table KPH 11055

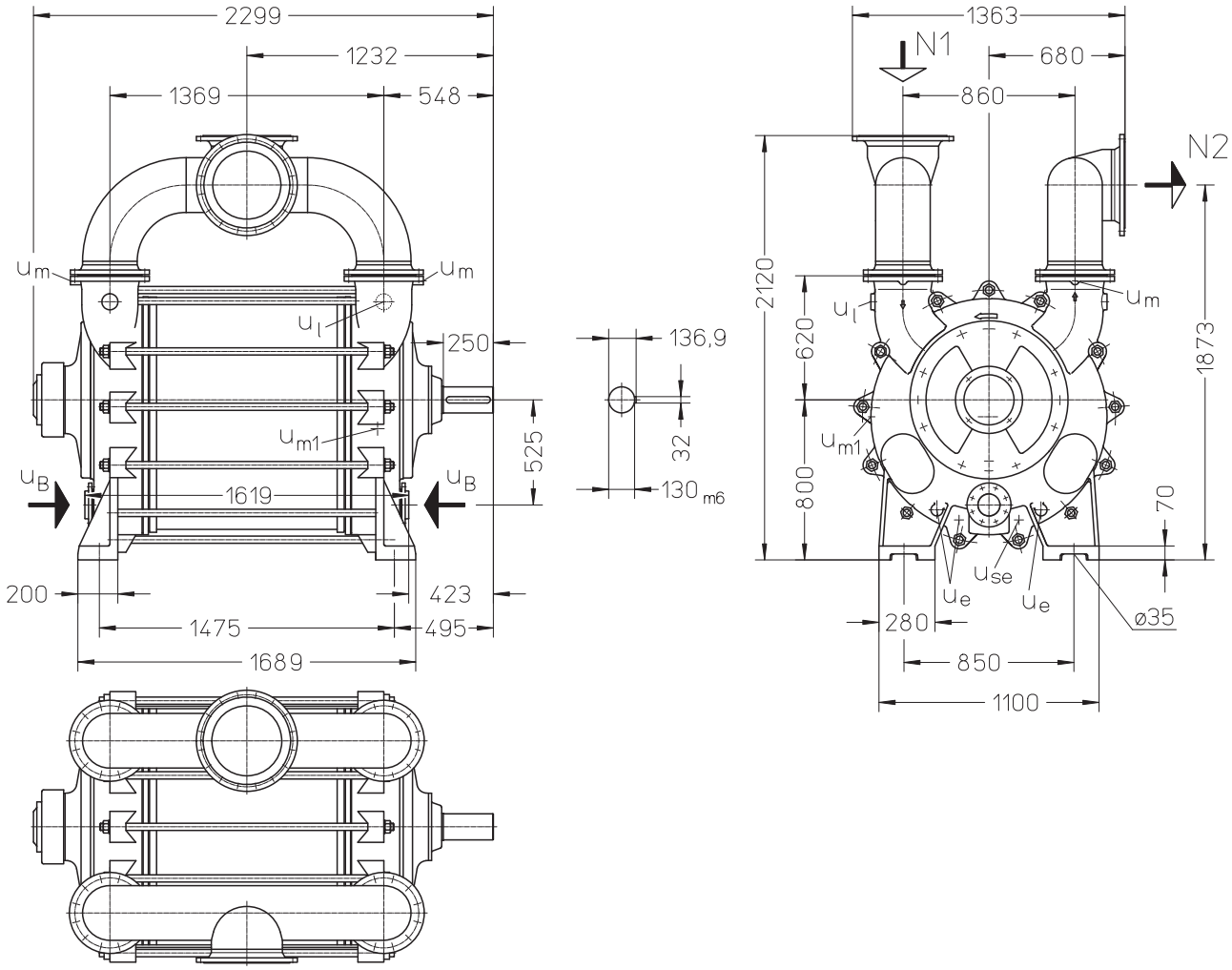

N 1 = gas-inlet DN 350

N 2 = gas-outlet DN 350

u_B = connection for service liquid G 4

u_e = drainage (screwed plug) G 1

u_l = connection for vent cock G 1 ½

u_m = connection for pressure gauge G ½

u_{m1} = connection for drain valve G 1

u_{se} = connection for dirt drain G 1

weight: abt. 5000 kg

flange connections to DIN 2501 PN 10	
DN	350
k	460
D	505
number x d_2	16 x 22

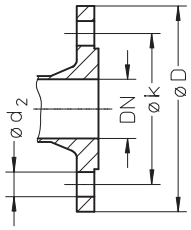

Fresh water requirements in [m³/h] dependent on compression pressure, speed, mode of operation and temperature difference

type	speed rpm	compression pressure in bar 0,4 KB difference in temperature °C 30	20	10	5	FB	0,8 KB difference in temperature °C 30	20	10	5	FB	1,2 KB difference in temperature °C 30	20	10	5	FB	1,5 KB difference in temperature °C 30	20	10	5	FB
KPH 90554	605	1,88	2,59	4,20	6,08	11	2,70	3,75	6,14	9,03	17	3,38	4,70	7,71	11,4	22	3,76	5,24	8,63	12,8	25
	690	2,27	3,09	4,82	6,71		3,23	4,42	7,01	9,93		4,03	5,52	8,79	12,5		4,51	6,19	9,89	14,1	
	740	2,50	3,37	5,16	7,02		3,50	4,76	7,44	10,4		4,40	5,98	9,36	13,0		4,92	6,71	10,5	14,7	
KPH 90567	605	2,37	3,23	5,09	7,15	12	3,39	4,65	7,39	10,5	18	4,40	6,02	9,55	13,5	23	5,07	6,93	11,0	15,4	26
	690	2,74	3,69	5,64	7,68		3,90	5,28	8,17	11,2		5,02	6,78	10,5	14,4		5,81	7,83	12,0	16,5	
	740	2,97	3,97	5,96	7,97		4,21	5,66	8,61	11,7		5,38	7,22	11,0	14,9		6,21	8,32	12,6	17,0	
KPH 10054	475	3,15	4,33	6,94	9,94	18	4,56	6,29	10,1	14,6	26	5,90	8,20	13,2	19,0	34	-	-	-	-	38
	535	3,63	4,94	7,70	10,7		5,22	7,11	11,2	15,6		6,75	9,21	14,5	20,3		7,81	10,6	16,6	23,1	
	590	4,08	5,49	8,35	11,3		5,82	7,85	12,1	16,5		7,47	10,1	15,6	21,4		8,58	11,6	17,7	24,2	
KPH 11055	410	4,50	6,07	9,32	12,7	20	6,55	8,89	13,8	19,1	31	8,40	11,4	17,6	24,3	39	9,67	13,1	20,2	27,6	44
	450	5,13	6,82	10,2	13,5		7,38	9,89	15,0	20,2		9,44	12,6	19,1	25,6		10,9	14,5	21,9	29,2	
	485	5,55	7,31	10,7	13,9		7,98	10,6	15,8	20,9		10,2	13,6	20,1	26,6		11,8	15,6	23,0	30,2	

FB = make-up liquid service
KB = combined liquid service, service liquid 30 °C, 20 °C, 10 °C, 5 °C warmer than the make-up water

Data regarding the pump size - order hints

series + size		hydraulic + bearings	shaft sealing	material design	case sealing
		B• two antifriction bearings •N one shaft end clockwise rotating	041 double gland packing	02 main parts cast iron, without non-ferrous metal 42 main parts high-grade steel	0 liquid seal
LPH	90554	BN	041	02, 42	0
	90567				
	10054				
	11055	BN	041	02	0

Accessories

recommended accessories			KPH 90554	KPH 90567	KPH 10054	KPH 11055
Pressure liquid separator		type weight	XBd 10212 374 kg		XBd 15212 483 kg	XBd 20212 575 kg
material design	130 / St-galvanized 172 / 1.4571	SIHI part No.	35 018 225 35 008 177		35 000 346 35 000 347	35 000 348 35 000 349
Service liquid line						
material design	072 / St 37-0	SIHI part No.	35 007 332	35 003 227	35 018 189	35 018 223
Liquid discharge trap		type weight	XUk 8102 90 kg		XUk 8102 90 kg	XUk 10102 125 kg
material design	762 / GG20+1.4541	SIHI part No.	43 014 819		43 014 819	43 014 821
Reduction						
material design	072 / St 37-0	SIHI part No.	-		35 013 017	-
Hanging gas line						
material design	072 / St 37-0	SIHI part No.	on request		on request	on request

Any changes in the technical development are reserved.

Sterling SIHI GmbH
Lindenstraße 170, D-25524 Itzehoe, Germany, Telephone +49 (0) 48 21 / 7 71 - 01, Fax + 49 (0) 48 21 / 7 71 - 274