SIHI^{LPH-X}- Liquid Ring Compressors

LPH 40106, LPH 40411
LPH 45008, LPH 45316

Pressure range: **0.2 to 1.5 bar**
Suction volume range: **55 to 175 m³/h**

CONSTRUCTION
Sterling SIHI liquid ring compressors are displacement compressors with a simple but robust construction and the following features and benefits:

Can handle almost all gases and vapours
Near isothermal compression
Oil free with no internal lubrication required
Able to handle quantities of liquid carry over
Low maintenance and safe operation
Low noise and almost vibration free
Available in a wide range of materials
Broad range of applications
O-Ring sealing as standard
Central drain plug as standard
Built in solids drain
Rotating metallic parts are non contacting to minimise wear

The Sterling SIHI liquid ring compressors LPH 40106 and LPH 40411 are one stage. They can be used without modification as vacuum pumps up to a suction pressure of 150 mbar (for more information see Catalogue Part LI 2).
The Sterling SIHI liquid ring compressors LPH 45008 and LPH 45316 are two stage. They can be used without modification as vacuum pumps up to a suction pressure of 33 mbar (for more information see Catalogue Part LII 3).

APPLICATION
Transport and compression of dry gases and saturated vapours. The pumps can also handle liquids. Compressors are used typically where a pressure of up to 1.5 bar is required and only a limited temperature increase due to the compression is permitted.
Applications include:
- The plastics processing industry for the recovery of gases such as vinyl chloride
- The petrochemical industry for the compression of flammable gases such as petroleum vapours or hydrogen
- Gas transfer e.g. to a reactor.

NOTE
By continuously feeding the compressor with a small amount of service liquid (usually water), the heat due to gas/vapour compression is conducted away. This also replenishes the liquid ring and ensures that it does not become saturated with process media. The condensed gas and fluid can be separated in a liquid separator (see Accessories Catalogue). Recharging the pump with service liquid at ambient temperature enables the unit to condense evacuated gases/vapours. More information is provided in the accessory catalogues.
The rotation of the pump is clockwise when viewed from the drive side.

GENERAL TECHNICAL DATA

Pump Type		Units	LPH 40106	LPH 40411	LPH 45008	LPH 45316
Speed	Normal speed = 50 Hz 60 Hz	rpm	1450 1750	1450 1750	1450 1750	1450 1750
Max. Compression over atmospheric		bar	0.8 or 1.2 [1)]		1.5	1.2 or 1.0 [1)]
Water pressure test (Overpressure)		bar	3.0		3.0	
Moment of inertia of rotating parts of pump and of water content		kg · m²	0.0375	0.05	0.05	0.09
Surface noise level		dB (A)	69...70		69...70	
Minimum permissible pulley diameter for V- belt drive		mm	160	160 or 180 [1)]	160	180 or 200 [1)]
Max. Gas Temperature	dry saturated	°C °C	200 100		200 100	
Service liquid						
Max. permissible temperature		°C	80		80	
Max. viscosity		mm²/s	90		90	
Max. density		kg/m³	1200		1200	
Liquid capacity up to middle of shaft		litre	3.5	4.5	4.0	7.0

In selecting a compressor, avoid choosing one which is likely to be operating at a combination of its maximum permissible limits.
[1)] at 60Hz

SIHI*LPH-X*

Materials

Position Number	Component	Materials 0A	0B	SZ	4B
10.60	Casing	0.6025			1.4408
10.90	Central Body	0.6025			1.4408
13.70, 13.71*	Guide Disc	0.6025		1.4404	
23.50, 23.51*	Impeller	2.1096.01	1.0619	1.4517	
21.00	Shaft	1.4021			1.4404
43.30, 43.31	Mechanical Seal Type SIHI FK (AG•)	Cr-Steel / Carbon / Butadiene Rubber			Cr Ni Mo-Steel / Carbon / Viton
43.30, 43.31	Mechanical Seal Type Sterling GMZ (AF•)	Cr-Steel / Carbon / Viton			Cr Ni Mo-Steel / Carbon / Teflon

* only on LPH 45008, 45316

Cut away Diagram LPH 40106, LPH 40411

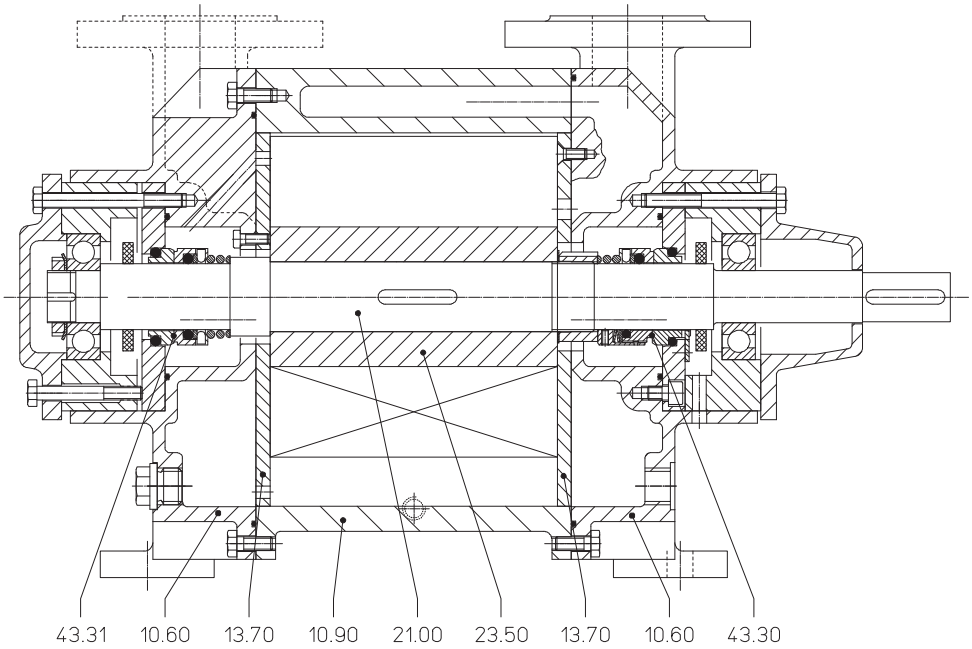

Cut away Diagram LPH 45008, LPH 45316

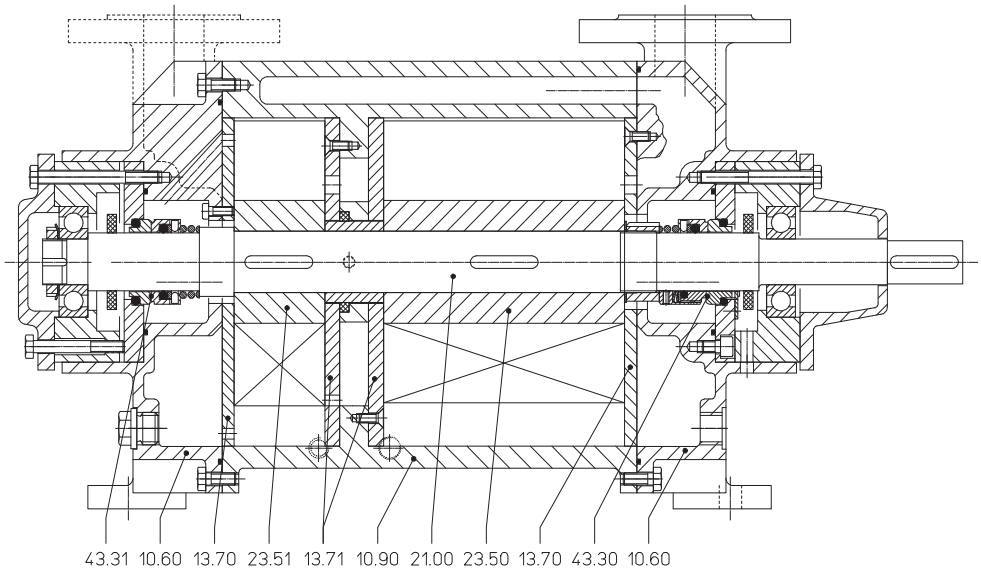

Performance

LPH 40106

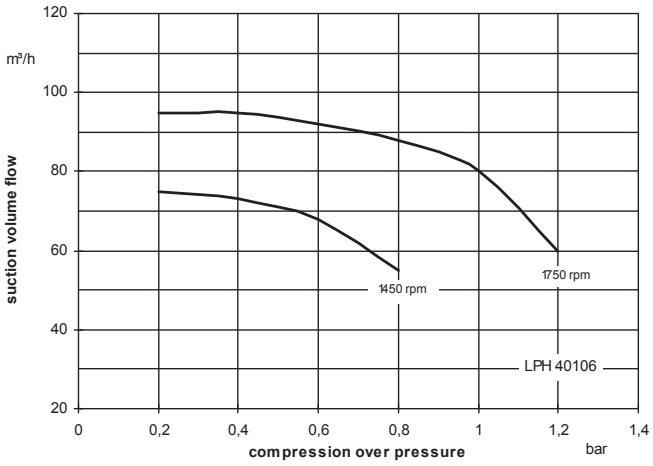

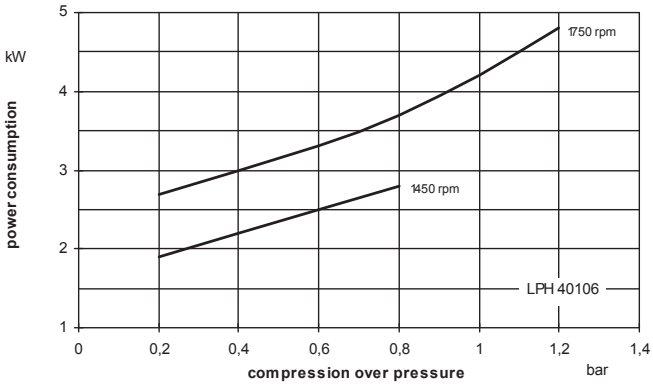

LPH 40411

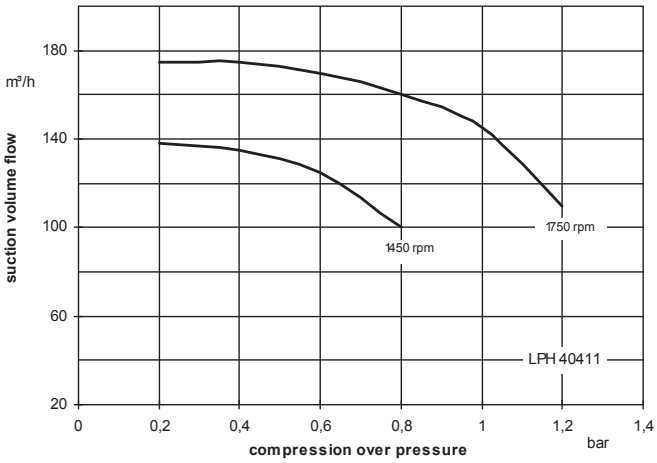

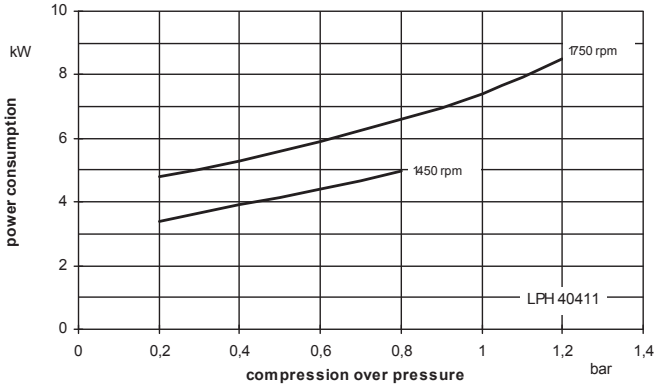

The suction volume and power consumed values are valid for compressing dry air at 20°C at atmospheric pressure (1013 mbar) to the corresponding overpressure using water as the service liquid with a temperature of 20°C. The curve tolerance is 10%. The compression pressure is expressed in bar relative to ambient air pressure.

The values quoted will change with variations in the operating conditions e.g. when the physical properties of the gas to be compressed change or there are changes in the service liquid (vapour pressure, temperature, density, viscosity), with liquid, carry over, with suction pressures different from atmospheric pressure or with gas – vapour mixtures.

To determine operating data when the operating conditions vary from those quoted, please consult Technical Catalogue Part TH.

SIHI*LPH-X*

Performance

LPH 45008

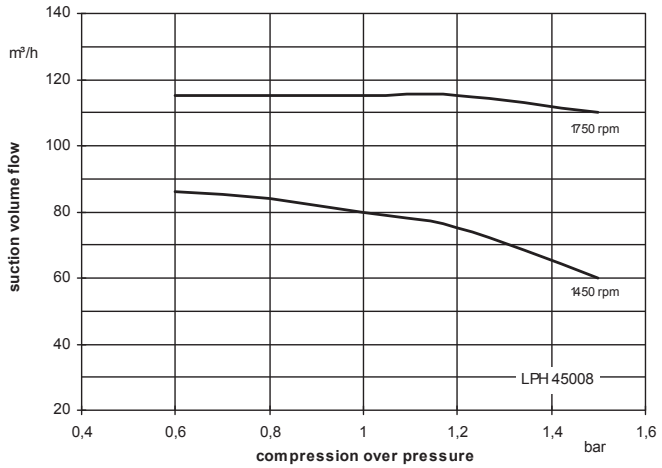

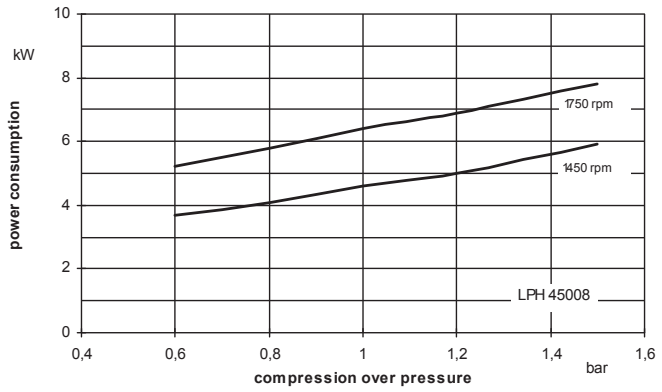

LPH 45316

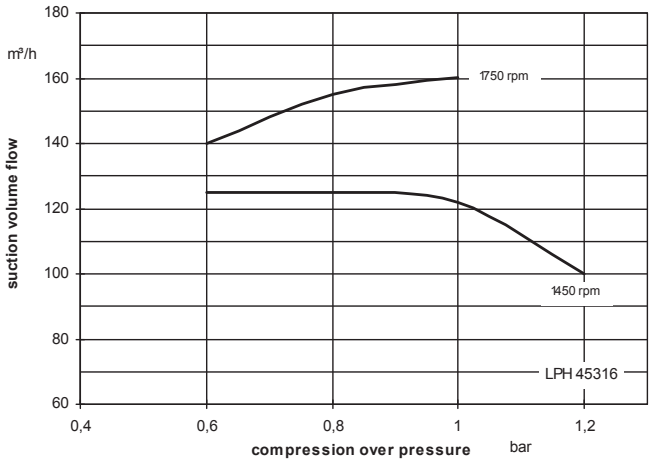

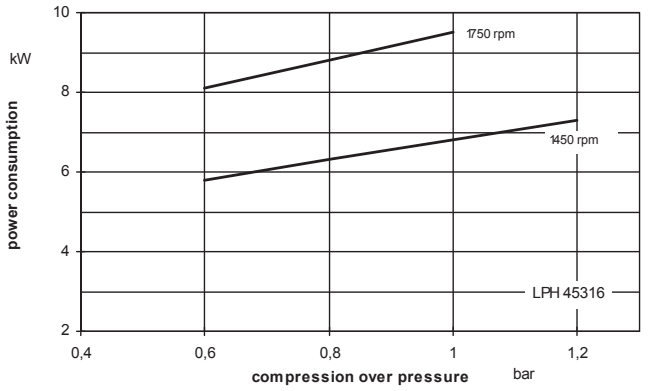

The suction volume and power consumed values are valid for compressing dry air at 20°C at atmospheric pressure (1013 mbar) to the corresponding overpressure using water as the service liquid with a temperature of 20°C. The curve tolerance is 10%. The compression pressure is expressed in bar relative to ambient air pressure.

The values quoted will change with variations in the operating conditions e.g. when the physical properties of the gas to be compressed change or there are changes in the service liquid (vapour pressure, temperature, density, viscosity), with liquid carry over, with suction pressures different from atmospheric pressure or with gas – vapour mixtures.

To determine operating data when the operating conditions vary from those quoted, please consult Technical Catalogue Part TH.

Dimensions LPH 40106, LPH 40411, LPH 45008, LPH 45316

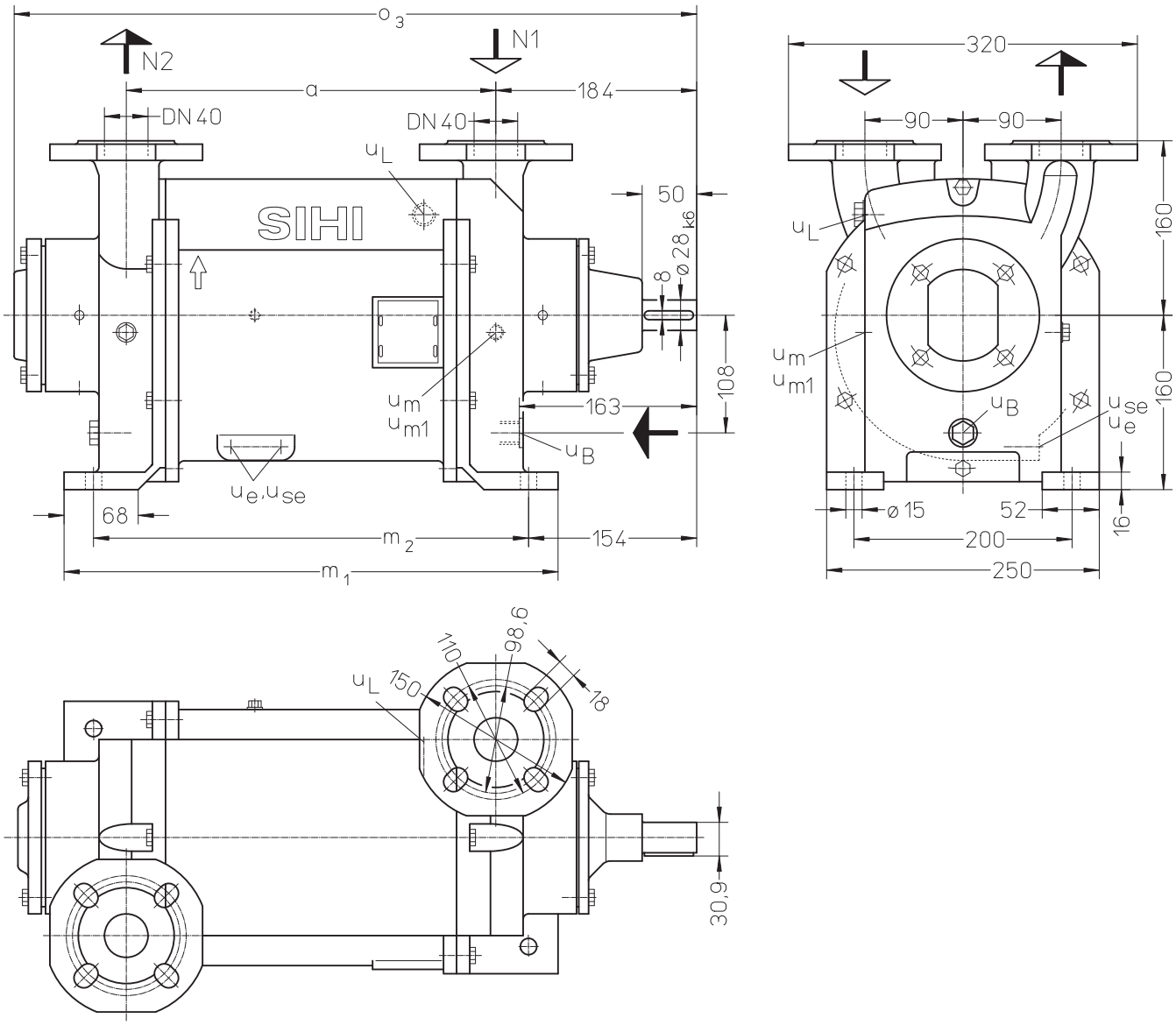

N 1 = Gas-Inlet DN 40

N 2 = Gas-Outlet DN 40

u_B = Connection for Service Liquid G 1/2

u_e = Connection for Drain G 1/8

u_{se} = Connection for Dirt Drain G 1/8

u_L = Connection for Vent Valve G 1/2

u_m = Connection for Pressure Gauge G 1/4

u_{m1} = Connection for Drainage Valve or Liquid Level Sensor G 1/4

	a [mm]	m_1 [mm]	m_2 [mm]	o_3 [mm]	Approx. Weight [kg]
LPH 40106	144	258	204	431	55
LPH 40411	194	308	254	481	60
LPH 45008	239	353	299	526	65
LPH 45311	269	383	329	556	70

SIHI*LPH-X*

Arrangement Drawing LPH 40106, LPH 40411, LPH 45008, LPH 45316 with Pressure Liquid Separator

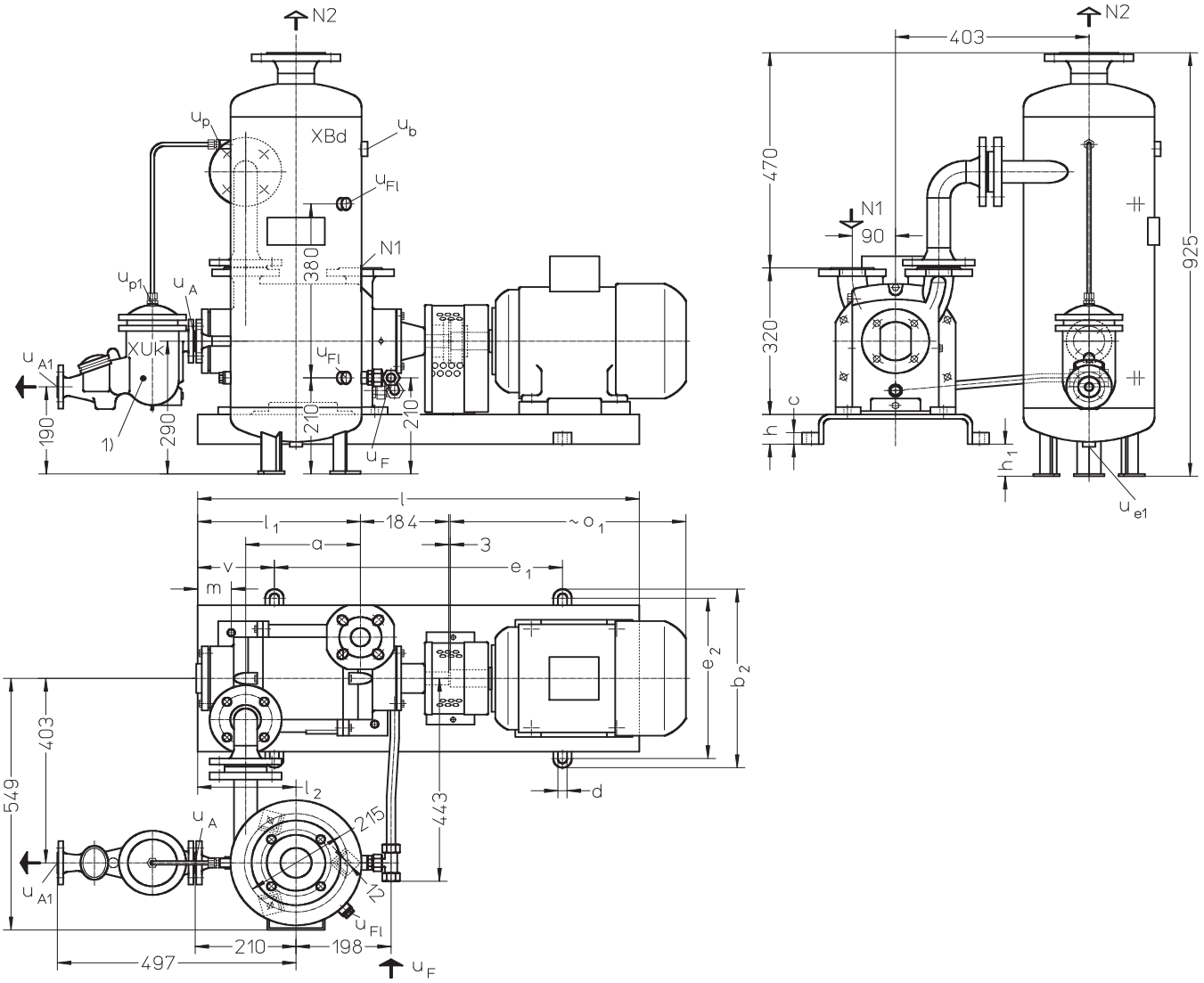

1) = Support required

N 1	=	Gas Inlet DN 40	u_{e1}	=	Drain Connection G ½
N 2	=	Gas Outlet DN 65	u_b	=	Connection for Safety Valve G ¾
u_F	=	Connection for Make-up Liquid 18 mm	u_{Fl}	=	Connection for Liquid Level Indicator G ½
u_A	=	Liquid Discharge DN 15	u_p	=	Connection for Gas Balance Pipe G ¼
u_{A1}	=	Liquid Discharge DN 15	u_{p1}	=	Connection for Gas Balance Pipe G ¼

Flange Connection Dimensions according to DIN 2501 PN 10 in [mm]			
DN	15	40	65
k	65	110	145
D	90	150	185
Number x d_2	4 x 14	4 x 18	4 x 18

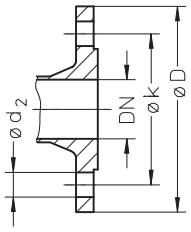

Dimensions on Arrangement Drawing LPH 40106, LPH 40411, LPH 45008, LPH 45316

Type	E-Motor 50 Hz Size	kW IP 55	kW EEx e II T3	Base-plate	a [mm]	b_2 [mm]	c [mm]	d [mm]	e_1 [mm]	e_2 [mm]	h [mm]	h_1 [mm]	l [mm]	l_1 [mm]	l_2 [mm]	m [mm]	v [mm]	o_1 * [mm]	2) ca. [kg]	3) ca. [kg]
LPH 40106	100L	3.0		S301	144	390	25	19	480	350	65	70	730	224	185	50	125	372	110	155
	100L		2.5																	
	112M	4.0																393	120	165
	112M		3.6																	
LPH 40411	112M	4.0		S303	194	390	25	19	600	350	65	70	920	274	185	50	160	393	130	175
	132S		5.0															453	145	190
	132S	5.5																	150	195
	132M		6.8															491	160	205
LPH 45008	132S	5.5		S303	239	390	25	19	600	350	65	70	920	339	205	70	160	453	155	200
	132S		5.0																150	195
	132M	7.5																	155	200
	132M		6.8															491	165	210
LPH 45316	132M	7.5		S344	339	450	30	24	660	400	80	55	1020	439	205	70	180	453	180	225
	132M		6.8															491	195	240
	160M	11.0		S385		490	30	24	740	440	80		1140				200	588	220	265
	160M		10.0																	

* = Dimensions depend upon motor supplier
2) = Weight for Compressor + Motor + Coupling + Coupling Guard + Baseplate
3) = as 2) + Pressure Separator + Pressure Line + Liquid Drain

Make-up Liquid in [m³/h] dependent on Compression Pressure, Speed, Method of Operation and Temperature Difference

Type	Speed [rpm]	Compression Pressure in [bar] 0.2 KB Temperature Difference [°C] 30	20	10	5	FB	0.6 KB Temperature Difference [°C] 30	20	10	5	FB	0.8 KB Temperature Difference [°C] 30	20	10	5	FB	1.2 KB Temperature Difference [°C] 30	20	10	5	FB
LPH 40106	1450	0.04	0,06	0.10	0.14	0.03	0.06	0.09	0.16	0.25	0.6	0.07	0.10	0.18	0.29	0,7	-	-	-	-	-
	1750	0.06	0.08	0.12	0.16		0.08	0.11	0.19	0.29		0.09	0.13	0.22	0.33		0,12	0,17	0,29	0,45	1
LPH 40411	1450	0.07	0.09	0.13	0.18		0.10	0.14	0.23	0.33		0.12	0.16	0.27	0.39		-	-	-	-	-
	1750	0.09	0.11	0.16	0.19		0.13	0.18	0.27	0.38		0.15	0.20	0.31	0.43		0.20	0.27	0.42	0.59	1

Type	Speed [rpm]	Compression Pressure in [bar] 0.6 KB Temperature Difference [°C] 30	20	10	5	FB	0.8 KB Temperature Difference [°C] 30	20	10	5	FB	1.2 KB Temperature Difference [°C] 30	20	10	5	FB	1.5 KB Temperature Difference [°C] 30	20	10	5	FB
LPH 45008	1450	0.09	0.12	0.19	0.26	0.5	0.10	0.13	0.21	0.31	0.6	0.12	0.17	0.27	0.40	0.8	0.14	0.20	0.32	0.46	0.9
	1750	0.11	0.15	0.22	0.30		0.13	0.17	0.26	0.35		0.16	0.21	0.33	0.46		0.18	0.24	0.37	0.52	
LPH 45316	1450	0.13	0.17	0.26	0.35	0.6	0.14	0.19	0.30	0.41	0.7	0.17	0.23	0.36	0.51	0.9	-	-	-	-	-
	1750	0.16	0.21	0.31	0.39		0.18	0.24	0.35	0.45		-	-	-	-	-	-	-	-	-	-

FB = Operation with make-up water
KB = Combined make-up water with service liquid 30 °C, 20 °C, 10 °C, 5 °C warmer than make-up water.

SIHI*LPH-X*

Size Details - Ordering Information

Range + Size		Hydraulic and Bearings	Shaft Seal	Materials	Casing Sealing
		A• 1.Hydraulic •B Two greased roller bearings	AGE Mechanical seal type SIHI FK, O-Rings Butadiene rubber AG1 Mechanical seal type SIHI FK, O-Rings Viton AFJ Mechanical seal type SIHI GNZ, O-Rings Viton AFK Mechanical seal type SIHI GNZ, O-Rings Teflon coated (Viton heart)	0A Main parts from cast iron (GG) with impellers in bronze 0B Similar to 0A, but impellers in steel SZ Similar to 0A, however impellers and guide discs are in stainless steel 4B Main parts out of stainless steel	1 O-Ring Sealing
LPH	40106	AB	AGE, AG1, AFJ, AFK	0A, 0B, SZ, 4B	1
	40411				
	45008				
	45316				

Spare Parts Kits – Order Numbers

LPH 40106, LPH 40411

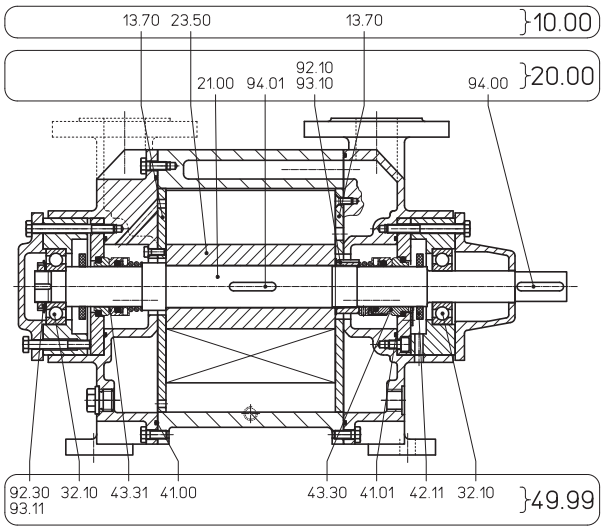

LPH 45008, LPH 45316

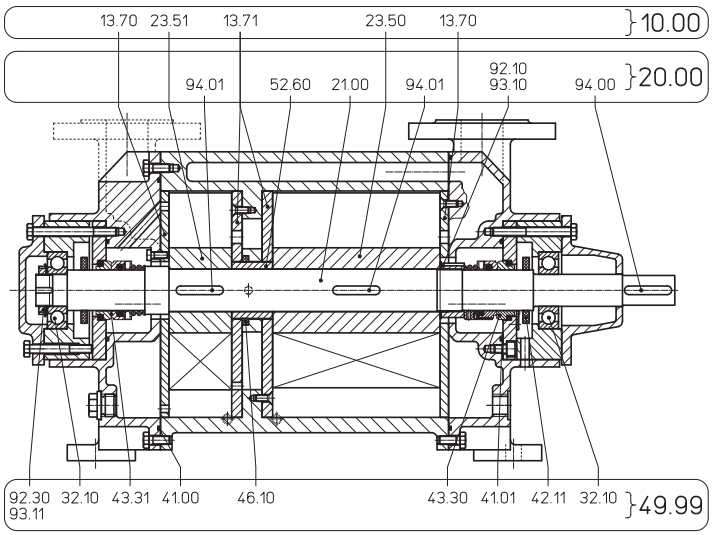

Material 0A					
Group	Spare Parts Kit	LPH 40106	LPH 40411	LPH 45008	LPH 45316
10.00	Hydraulic	65 006 835	65 006 836	65 006 832	65 006 834
20.00	Shaft	65 006 715	65 006 714	65 006 712	65 006 710
49.99	Basic Repair AGE	65 008 221			
49.99	Basic Repair AFJ	65 008 222			

Material 0B					
Group	Spare Parts Kit	LPH 40106	LPH 40411	LPH 45008	LPH 45316
10.00	Hydraulic	65 006 740	65 006 741	65 006 743	65 006 745
20.00	Shaft	65 006 715	65 006 714	65 006 712	65 006 710
49.99	Basic Repair AGE	65 008 221			
49.99	Basic Repair AFJ	65 008 222			

Material SZ					
Group	Spare Parts Kit	LPH 40106	LPH 40411	LPH 45008	LPH 45316
10.00	Hydraulic	65 006 748	65 006 749	65 006 751	65 006 753
20.00	Shaft	65 006 715	65 006 714	65 006 712	65 006 710
49.99	Basic Repair AGE	65 008 221			
49.99	Basic Repair AFJ	65 008 222			

Material 4B					
Group	Spare Parts Kit	LPH 40106	LPH 40411	LPH 45008	LPH 45316
10.00	Hydraulic	65 006 748	65 006 749	65 006 751	65 006 753
20.00	Shaft	65 006 754	65 006 755	65 006 757	65 006 759
49.99	Basic Repair AG1	65 008 223			
49.99	Basic Repair AFK	65 008 224			

SIHI*LPH-X*

Accessories

Recommended Accessories	Material		LPH 40106	LPH 40411	LPH 45008	LPH 45316
Liquid Separator		Type/Weight	XBd 0413 / 28 kg			
Separator	Steel, galvanised 1.4571	SIHI-Part No.	on request on request			
Service liquid line	Steel, galvanised 1.4571	SIHI-Part No.	20 059 389 20 059 393	20 059 390 20 059 394	20 059 391 20 059 395	20 059 392 20 059 396
Pressure Pipe (Elbow)	1.0254 1.4571	SIHI-Part No.	35 003 165 35 003 166			
Liquid Level Indicator	Brass / Perspex 1.4571 / Perspex	SIHI-Part No.	43 014 920 43 040 384			
Liquid Drain		Type / Weight	XUk 1602 / 11 kg			
Service liquid drain	0.6020+1.4541	SIHI-Part No	43 014 792			
Gas balance line	Steel, galvanised 1.4571	SIHI-Part No	On Request 35 010 221			
Flange Adapter	Steel 1.4571	SIHI-Part No	Not Required	20 059 826 On Request	Not Required	
Drain Valve XCg 015	Steel 1.4571	SIHI-Part No	43 014 545 43 014 546			
Double nipple 1/2“- 1/4“	Steel, galvanised 1.4571	SIHI-Part No	43 049 216 43 013 084			
Vent Valve	Brass 1.4571	SIHI-Part No.	43 014 257 43 014 271			
Motor						
Motor Standard Execution IP 55		Size Power Weight	100 L 3.0 kW 24 kg	112 M 4.0 kW 31 kg	132 S 5.5 kW 41 kg	132 S 5.5 kW 41 kg	132 M 7.5 kW 49 kg	160 M 11.0 kW 73 kg
Coupling for Motor IP 55		Type Weight	B 80 1.5 kg		B 95 2.6 kg	B 95 2.6 kg		B110 4.0 kg
Pump Side Motor Side , incl. flexible elements		SIHI-Part No.	43 021 414 43 021 417		43 021 426 43 021 433	43 021 426 43 021 433		43 021 439 43 021 448
Coupling Guard	Steel	SIHI-Part No.	43 042 222		43 042 248	43 042 248		43 042 250
Motor in EEx e II T3 Execution		Size Power Weight	100 L 2.5 kW 23 kg	112 M 3.6 kW 29 kg	132 S 5.0 kW 42 kg	132 M 6.8 kW 61 kg	132 S 5.0 kW 42 kg	132 M 6.8 kW 61 kg	160 M 10.0 kW 67 kg
Coupling for Motor EEx e II T3		Type Weight	BDS 88 2 kg	BDS 103 3 kg	BDS 103 3 kg			BDS 118 4 kg
Pump Side Motor Side , incl. flexible elements		SIHI-Part No.	43 028 112 43 024 707	43 026 564 43 025 941	43 026 564 43 025 941			43 025 946 43 000 737
Coupling Guard	Brass	SIHI-Part No.	43 042 223	43 042 249	43 042 249			43 042 251
Baseplate		Type Weight	S 301 27 kg	S 303 34 kg	S 303 34 kg		S 344 44 kg	S 385 62 kg
	Steel	SIHI-Part No.	43 040 634	43 040 635	43 040 635		43 040 637	43 040 639

Designs subject to change without prior notice.

Sterling SIHI GmbH
Lindenstraße 170, D-25524 Itzehoe, Germany, Tel. +49 (0) 48 21 / 7 71 - 01, Fax +49 (0) 48 21 / 7 71-274